Flex Lifting
a brand of AxA Group

FLEX
G750DBL

PRODUCT
CATALOGUE

WE SIMPLIFY YOUR LIFTING TASK

www.flexlifting.com

MADE IN ITALY

FLEX 50DBL

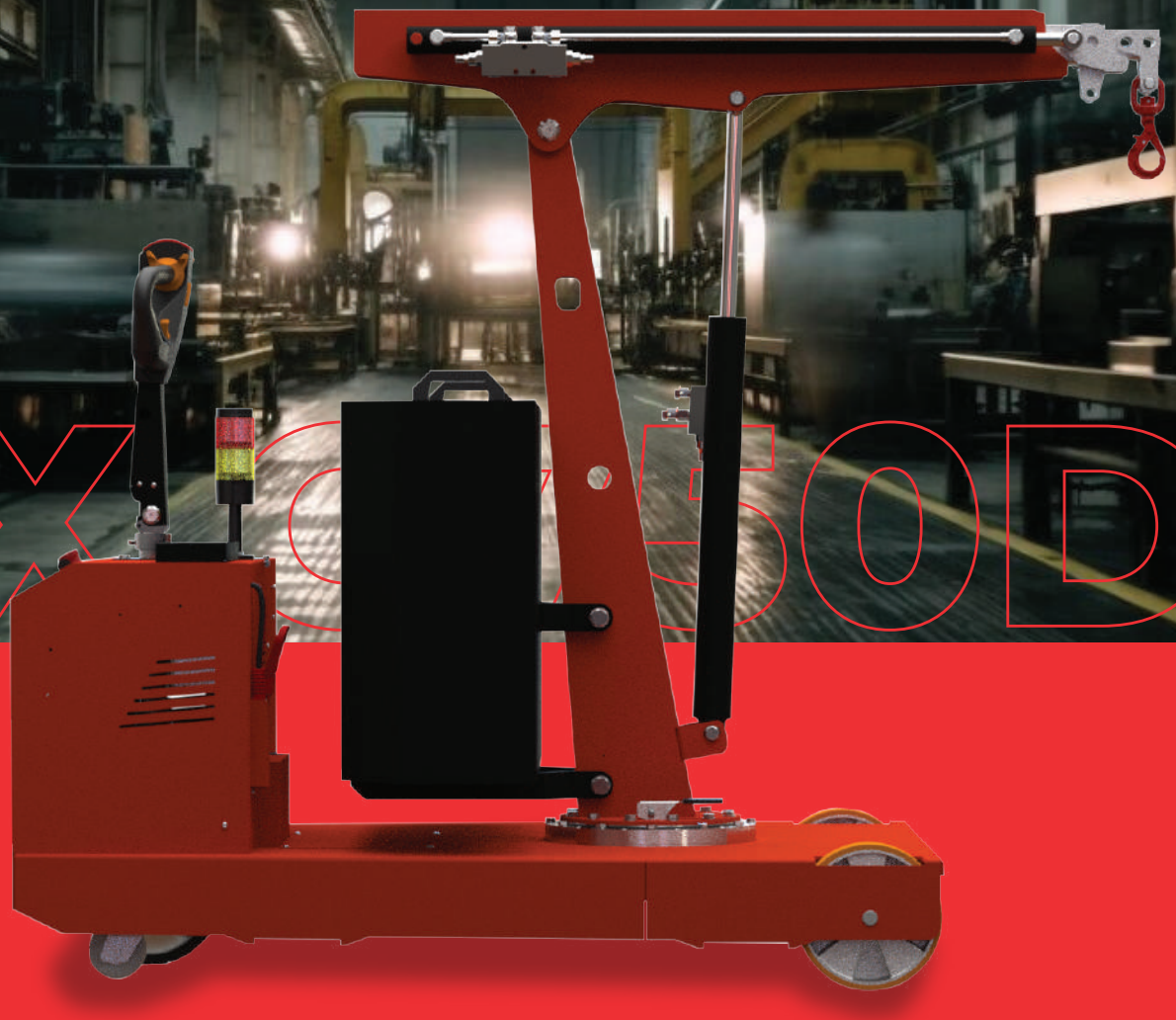

ELECTRIC POWERED COUNTERBALANCED CRANE

Our model FLEX G750DBL is an electric powered counterbalanced mobile swivel crane with a maximum lifting capacity of 750kg. The standard configuration includes a double electric telescopic boom that extends up to 2400 mm. The control levers enable operators to control all movements of the arm at adjustable and proportional speed. The rotation of the slewing ring can be locked manually every 30°, and the crane's exceptional steering angle facilitates movement through narrow spaces and enables rotation in confined areas. Model crane FLEX G750DBL is an electric mobile lifting solution that can be used in all sectors being silent, environmentally friendly and zero-emission. Powered by maintenance free AGM sealed batteries, it can be equipped also with Lithium batteries. It is provided with external battery charger, and its unique safety features prevent the load from lowering in case of hydraulic system failure and overload protection.

LIFTING CAPACITY	JIB ARM SWIVEL	MAX. LIFTING HEIGHT	MAX. OVERHANG
750 KG	270°	3938 MM	2400 MM

LOAD CHART

ELECTRIC DOUBLE BOOM

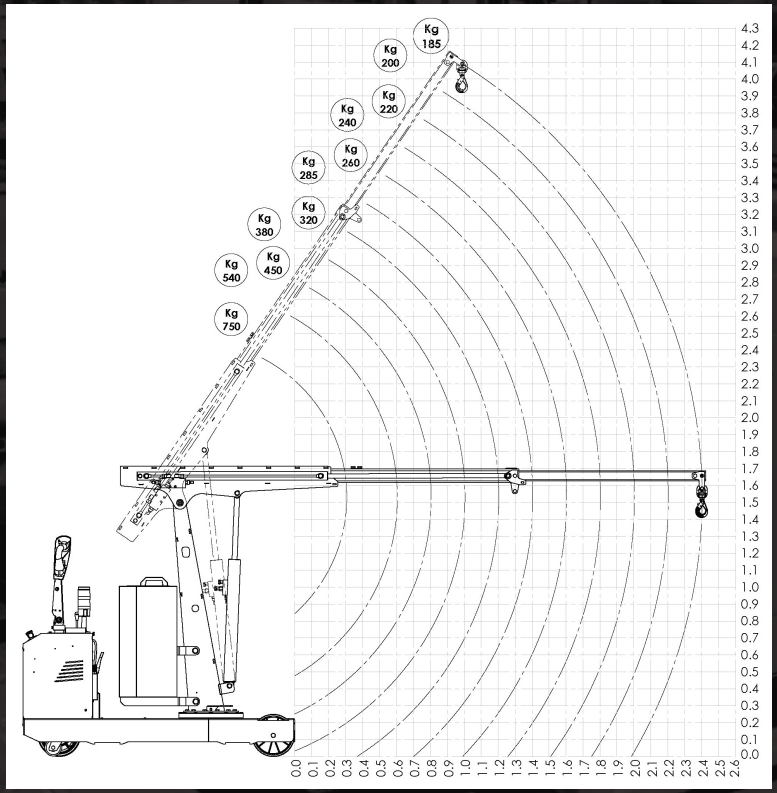

MAIN FEATURES

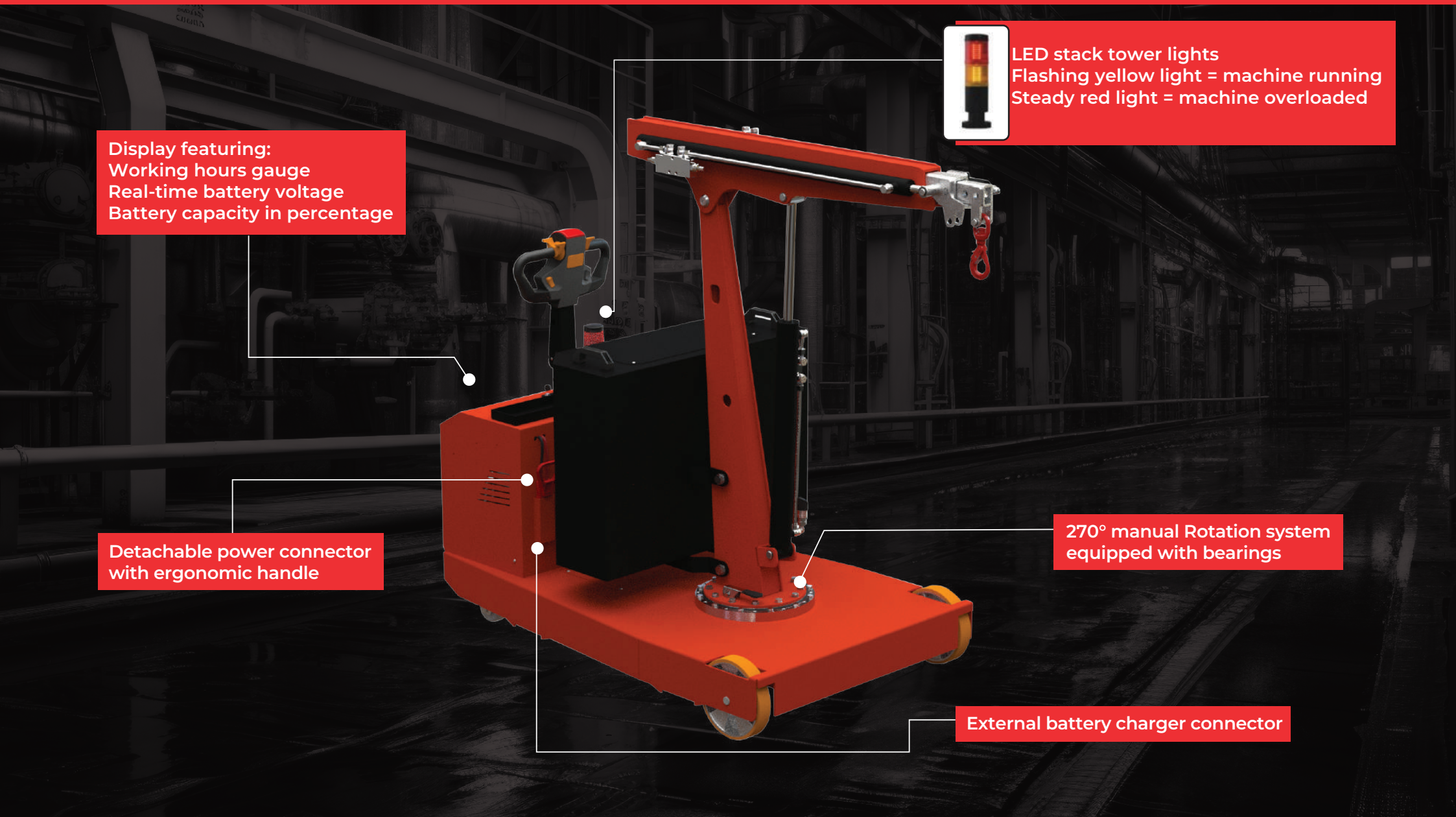

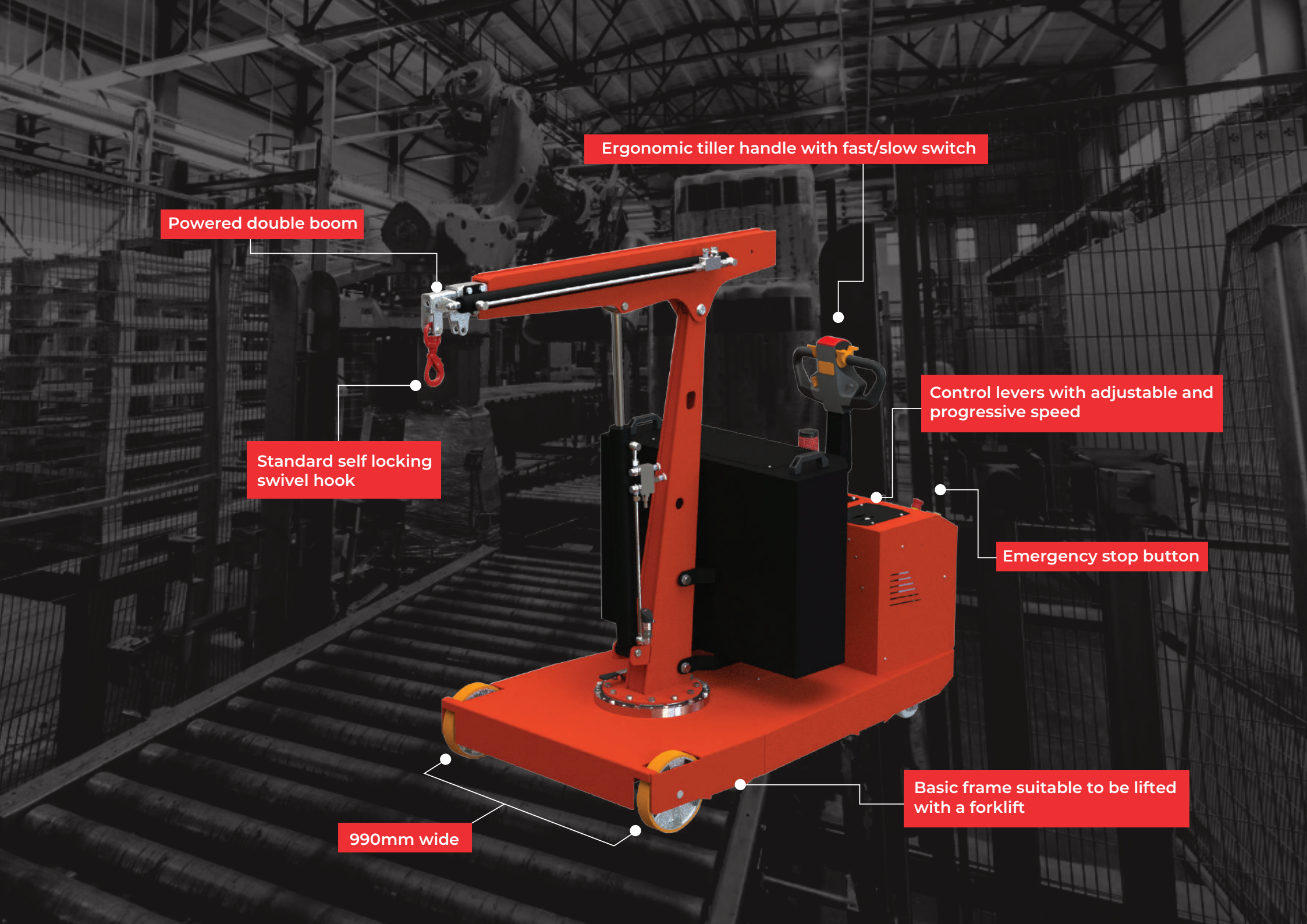
Ergonomic tiller handle with fast/slow switch
Powered double boom
Control levers with adjustable and progressive speed
Standard self locking swivel hook
Emergency stop button
Basic frame suitable to be lifted with a forklift
990mm wide

8 GOOD REASONS
TO CHOOSE A FLEXLIFTING CRANE

EASE OF USE

Thanks to their intuitive design our cranes are easy to use and do not require an extensive staff training. A user friendly solution that improves efficiency and productivity at once.

NO INSTALLATION REQUIRED

All our cranes are counterbalanced which means that a load can be picked & carried without using outriggers. Just turn the key on to get the cranes working. Our cranes come fully assembled and are ready to use. No installation = zero additional costs and waste of time.

VERSATILE AND FLEXIBLE

Unlike fixed cranes, mobile cranes can move to several plant areas. No licence required. Our cranes can get closer to the load even in presence of obstacles or perimeter protections. They can be equipped with several type of underhooks.

COMPACT DIMENSIONS

One of the main benefits of mobile cranes is their level of flexibility. This is particularly important in areas that have limited space or many obstacles in the way, and since they take up a lot less room they are a favoured choice for busy locations. Portable cranes can also be taken inside buld ings, making them the perfect solution to in-door projects.

PRECISE POSITIONING

The use of mini cranes, especially the ones equipped with a progressive speed control, lead to a better accuracy when positioning a load or a component that must be handled with care such as molds, engines, etc.

LOW MAINTENANCE

Our cranes offer long-term performances with a short- term return on investment thanks to their low maintenance costs and reduced down-time, compared to other lifting equipment.

FAST LEAD TIMES

One of our main goals is to be able to meet our customers' demand as efficiently as possible, always ensuring a ready-to-ship stock of almost all our mobile crane models.

INCREASED ERGONOMICS

The use of mini cranes for moving and lifting loads eliminates physical efforts and manual operations and reduces injuries caused by musculo-skeletal trauma.

POPULAR APPLICATIONS & MARKET SEGMENT

MAINTENANCE

Cantilever cranes are often used in the aviation industry for specific aircraft-related tasks. For handling engines, dismantling seats, raising sensitive components such as radars or antennas, etc.

CNC MACHINES

Using mini mobile cranes for tool changing and positioning on CNC machines improves the efficiency, safety and precision of machining operations. They have become essential equipment in many high-precision production workshops.

PICKING

Using mini mobile cranes to bypass ground obstacles, where traditional workshop cranes cannot access due to their stabilizing legs, offers a practical and effective solution in various scenarios. They are extremely useful tools for lifting tasks in hard-to-reach spaces.

TESTING

Counterbalance cranes are versatile and precise tools for positioning components on test benches. They offer benefits in safety, productivity and flexibility, making them a common choice for companies involved in product manufacturing and testing.

ASSEMBLY LINE

Using mini mobile cranes along assembly lines can improve production efficiency, reduce the risk of accidents, and enable loads to be handled precisely in spaces where other equipment can't be maneuvered. This helps optimize manufacturing operations.

PLASTIC INJECTION PROCESSES

Using counterbalance cranes to change molds is a common practice in the manufacturing industry, especially in the production of plastic parts, die-cast products and other molding processes.

www.flexlifting.com

Flex Lifting
a brand of AxA Group

Via Morandi, 21
40060 Toscanella di Dozza (Bologna), Italy

PH: +39 0542 67 34 34

info@flexlifting.com